MotoParaFly

X-max

User's manual

Table of Content

Specifications X-max

Trike

Nett weight..... 87 kg
Fuel tank capacity..... 20l
Number of seats 1

Engine

Model ..... Briggs & Stratton 2V
Number of cylinders..... V-twin
Type..... 4-stroke
Power..... 23 KW
Fuel type..... Pb98

Power transmission

Transmission ratio..... 2,36 :1
Power transmission type..... poly V belt

Propeller

Producer..... Helix
Type..... H40 F 1,40m L-L-13-3
Number of blades..... 3

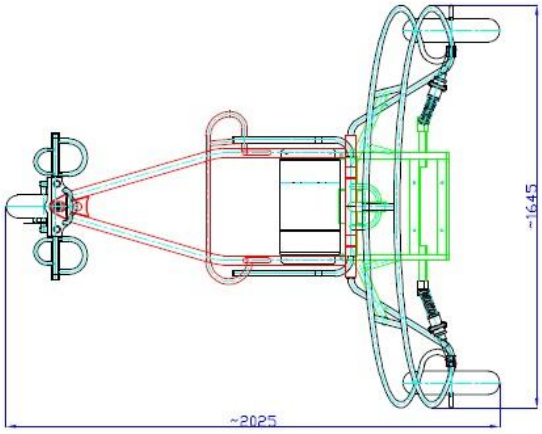

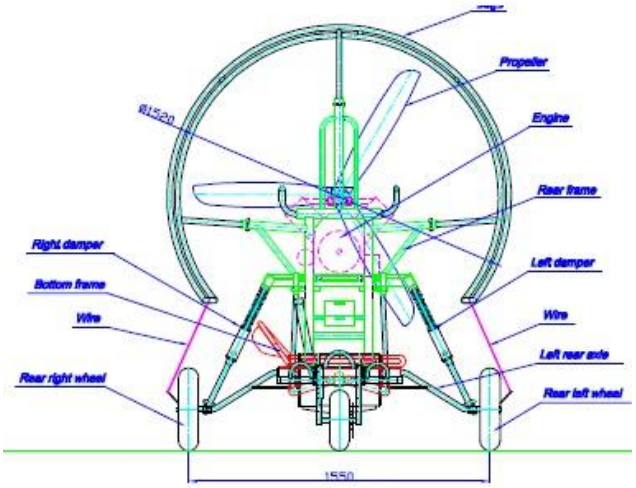

1. Features

1. Main frame
2. Engine frame
3. Engine
4. Pilots' seat
5. Rear axle with dumpers
6. Steerable front wheel with disc brake and shock dumper
7. Alloy fuel tank
8. Moto-Para-Fly exhaust system
9. Paraglider suspension
10. Cocpit
11. Propeller cage – 4 parts
12. Carriers

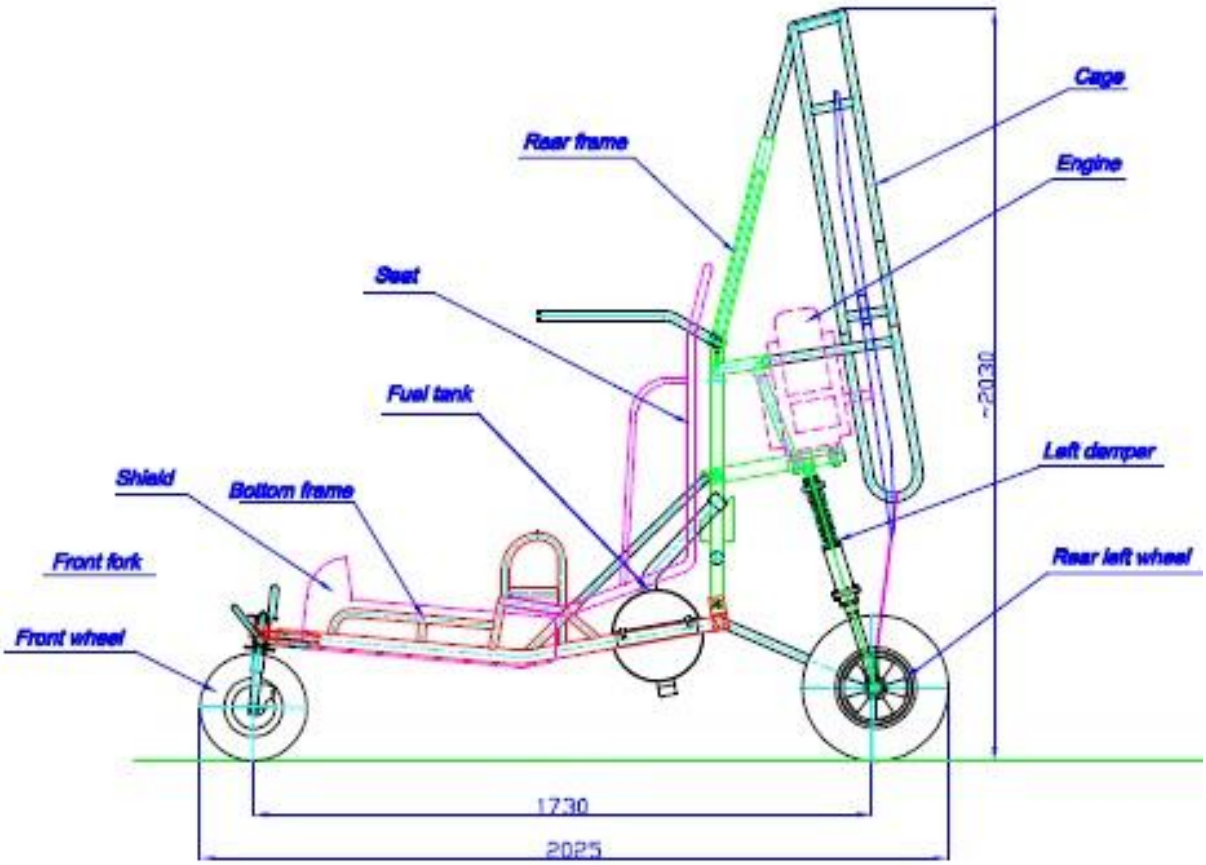

2. Standard procedures

a) Before take-off checklist

Each time before takeoff the pilot is obliged to check the equipment as follows:

I. Trike

- Frame, bolts and mount points – whether the items are not loose, bent or cracked,
- Mounting of the wheels, their functionality, tire pressure and brake operation, the condition and tension of rear axle link,

- Pilots’ seat -mounting and fasteners - no tear or abrasion, check fasteners functionality,

- Paraglider suspension – - no tear or abrasion, no loosened, bent or cracked items,

- Rescue system – check mounting points – refer to Independence owner's manual

- Battery fastening – tight Velcro strap fastening

- Propeller cage and its attachment - no damage and deformation

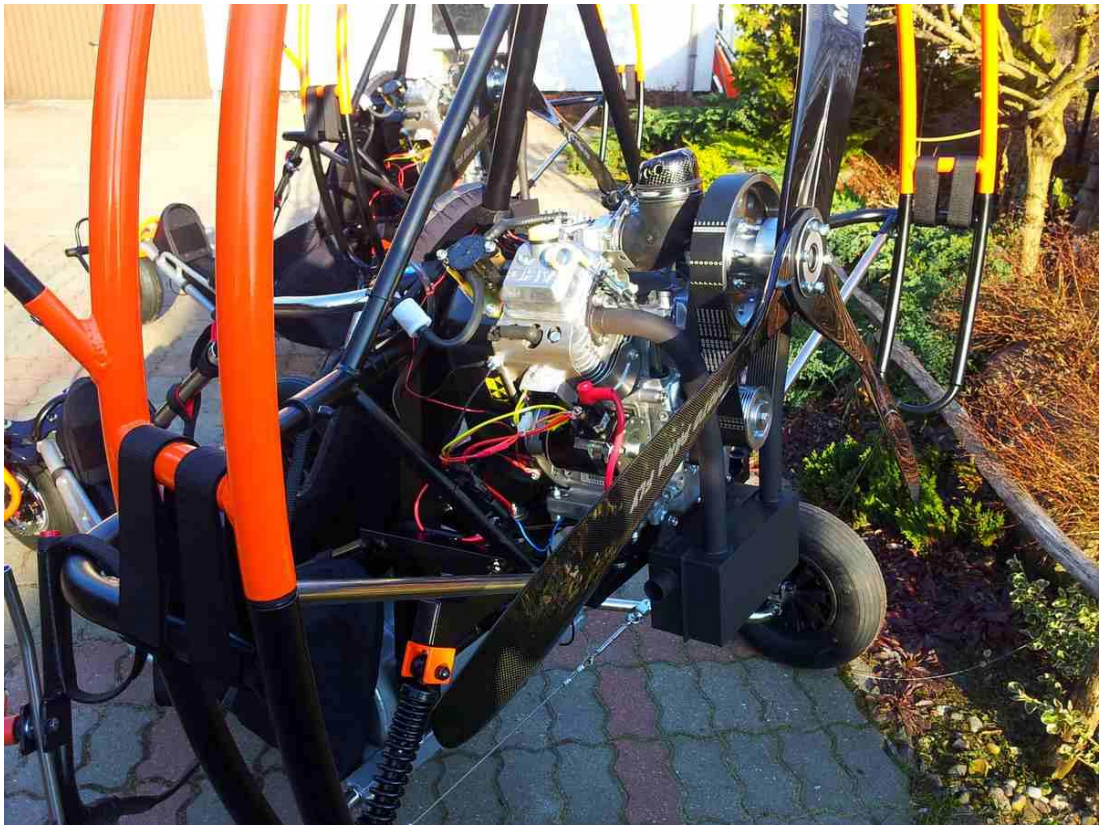

- Strobo light

II. Engine

- Engine frame and engine fixing components

- Electric wiring – connectors, isolation and fitting condition,
- Propeller fixing and condition- no visible damage as scratches, cracks, delamination, dents,
- Condition and tension of poly V belt,

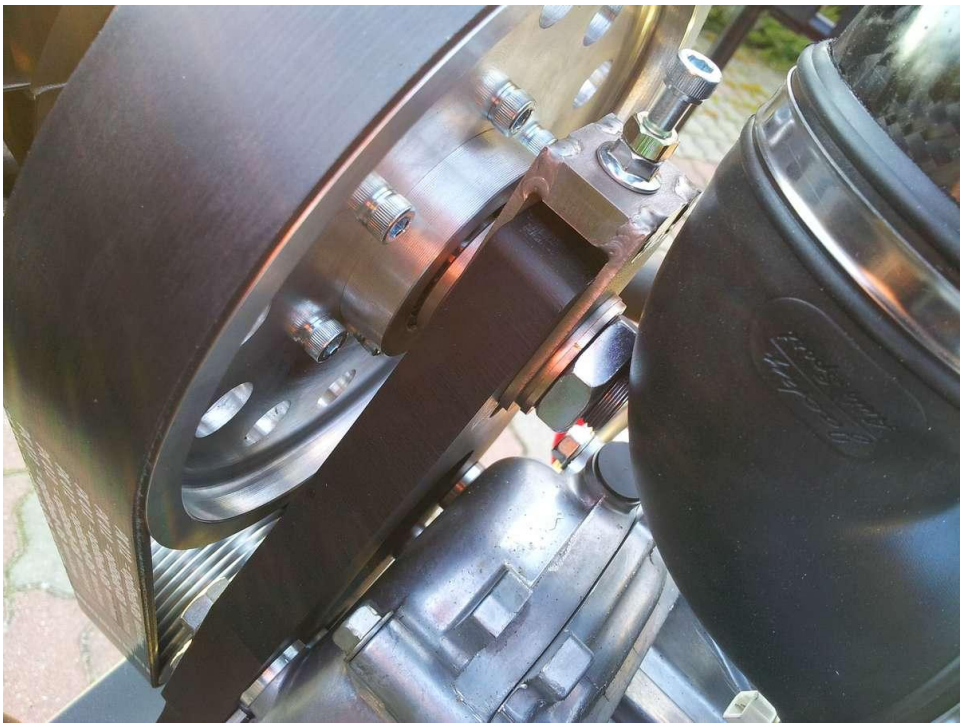

- Exhaust and its fixing – no cracks, loose parts,

- Operation of engine OFF switch
- Operation of throttle-lever – does it moves freely in the full range,

III. Paraglider

- **For paraglider pre flight check always refer to paraglider users manual**
- Canopy – no tears, holes and abrasions,
- Lines – are all the lines untangled, no lines under canopy,
- Risers – no abrasions, and other damages
- Steering lines– no knots, pulleys' functionality and condition

b) Refueling

- For X-Max use only high quality unleaded petrol pb98
- Do not fuel up the tank completely (leave 5 cm of free space), watch fuel level indicator
- Fuel older than 30 days after the tank should not be used
- After refueling, make sure that the cap is fully tightened

Fuel level sensor

Fuel gauge

1- Main ignition switche, 2 –Low oil pressure LED indicator, 3-Engine start, 4-Engine stop, 5- Strobe light switche, 6-Fuel gauge.

c) Engine start and warmup

Before starting the engine follow the “before takeoff” checklist. To start the engine:

- Turn the key clockwise
- Press and hold the start button till the engine start

Choke lever

- Always warm up the engine before flight

Cruise control

3. Engine maintenence

a) Engine specification

Briggs & Stratton V2	
Type	4 stroke
Number of cylinders:	V-twin
Engine Displacement (cc)	627 cm^3
Power	33 ps by 4200 rpm
Cylinder bore diameter:	75,5 mm
Stroke:	70 mm
Engine waight	38 kg
Oil pan capacity	1.7 liter (with oil filter)

b) Maintenance – check intervals

- Oil..... 5 W 40 syntetetic
- Oil level check..... every 5 hours of operation
- Oil exchange..... after first 8 hour of operation, than every 50hours or everyseason,
- Air filter exchange..... every 50 hours, or every season,
- Spark plug exchange..... every 100hours,or every season,
- Check valve clearance..... every 40 hours

c) Maintenance – procedures

I. Oil change procedure

1. Preparation
    - Replace oil when engine OFF but still warm
    - Clean the oil fill cap area and remove the dip stick.

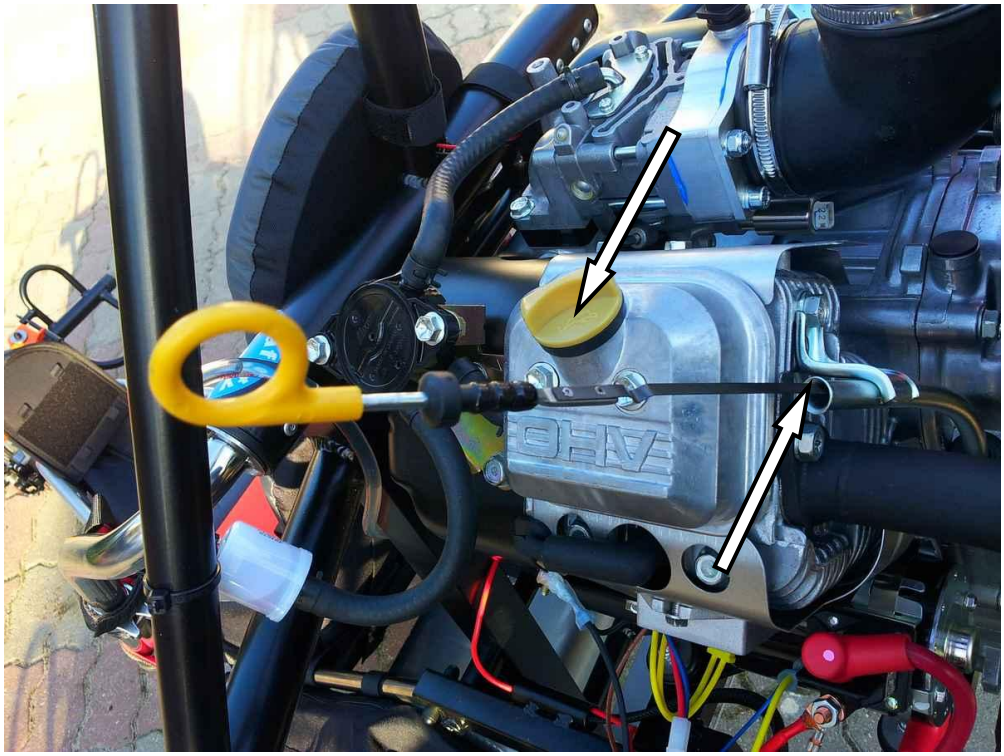

2. Oil drain

- Remove the oil drain plug, turning counter clockwise.
- Drain the oil to appropriate receptacle, reinstall the drain plug

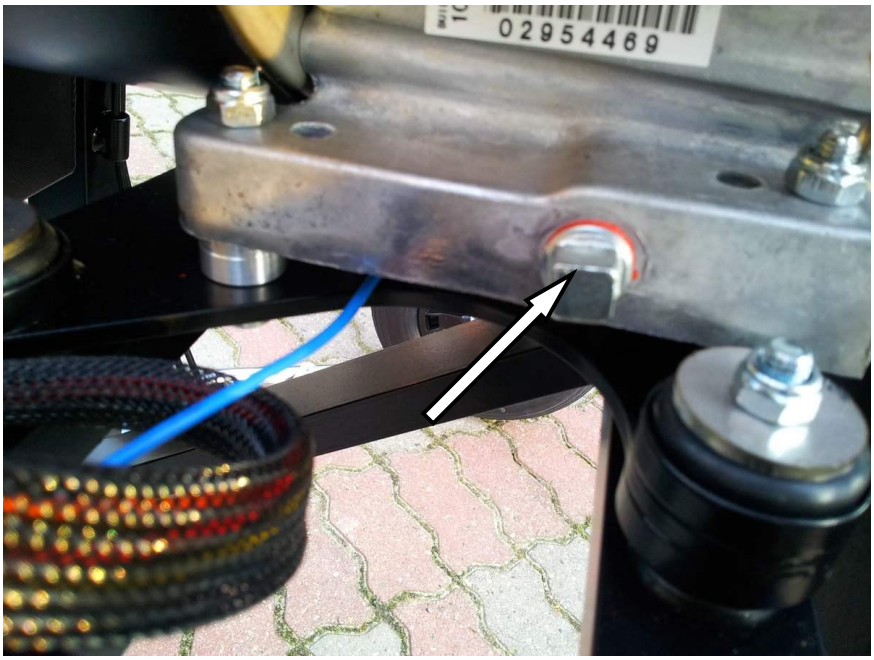

3. Oil filter exchange

- Oil filter must be replaced during every oil change.
- Unscrew the oil filter counterclockwise.
- Clean the area where filter contact the engine.
- Before installing new filter, lightly oil filter gasket with fresh, clean oil.
- Screw filter on by hand until oil filter gasket contact engine surface,than tighten to 1/2 to 3/4 turn more.
- The filter is instaled.

4. Oil filling procedure
    - Level the engine.
    - Remove the oil fill cap and add fresh oil. First add 1.7 liter.
    - Start and run the engine on idle for 30 seconds.
    - Shut engine off and wait 30 seconds.
    - Add more oil slowly to bring the level to Full mark on dipstick.
    - **Do not overfill.**
    - Replace the oil fill cap and dipstick.

II. Spark plug exchange procedure

1. Disconnect the battery, take off spark plug wire and clean the space around spark plug to avoid any debris get inside combustion chamber.
2. Unscrew the spark plug using spark plug spanner, and clean spark plug holes.
3. Screw in new sparkplug by hand until the gasket reaches the cylinder head.
4. Tighten with touque 25-30Nm.

4. Propeller Helix H40F

HELIX
Carbon GmbH

Tel. (0240)140 882-0
Fax (0240)140 882-01

Merzbrück 206 · 52146 Würselen

Verkehrsanbindung
Aachen-Merzbrück EDKA

Internet: www.helix-propeller.de
e-mail: mail@helix-propeller.de

Manual for Propeller Type H30F

Propeller Type:

Propeller Serial No.:

Date of Sale:

Seal and Signature of Manufacturer:

Index

1 Description

HELIX propellers have been built since 1990 using composite materials such as carbon fibre, epoxy-resin, epoxy resin foam and aluminium.

This combination of materials provides:

- **High Thrust**
- **Low Noise**
- **Durability**

Figure 1: 2-blade and 3-blade propeller of type H30F

The propeller blades are made from several layers of woven carbon fibre, reinforced with different sorts of carbon fibre tapes. They are bonded with epoxy resin foam reinforced by glass fibre. This method of construction ensures that the load is distributed throughout the whole surface of the blade and dissipates vibration.

2 Specification of Propeller Type

H	30	F	1,30m	L -	M -	08 -	3	(...)

Helix

Strength Category
25 = 1 - 10 kW
30 = 5 - 25 kW
40 = 10 - 35 kW
50 = 20 - 100 kW

Model
F = Fixpitch
V = Variable Pitch

Diameter in [m] (Meter)

Rotating Direction
L = Left
R = Right

Profile and Shape for H30
Z = Straight Shape with small profile-depth and -thickness
M = Straight Shape with medium profile-depth and -thickness
L = Straight Shape with large profile-depth and -thickness
NJ = Straight Shape with small profile-depth for engine cooling
NM = Straight Shape with medium profile-depth for engine cooling
FC = Scimitar Shape with large profile-depth and -thickness

Fixpitch in [°] (degree)

Number of Blades

Customer Specific Modifications

Table 1: Specification of the Propeller Type, Structure of the Helix Propeller Name

3 Operating Limitations

HELIX Propellers are constructed for giving thrust to aircrafts with an engine output of between 1 and 100 kW using 2-stroke, 4-stroke, rotary- or electric engine.

The operating limitations for the here described propeller types of **H30F** as 2-, 3- and 4-Blade-Version in clockwise and anti-clockwise rotation are for diameters from <1,00m to 1,55m.

There is to distinguish:

For propeller of size from **1,00m – 1,25m**:

- Maximum propeller-rpm: **4.300 rpm**
- Maximum engine power: **25 kW**

For propeller of size from **1,30m – 1,55m**:

- Maximum propeller-rpm: **3.000 rpm**
- Maximum engine power: **25 kW**

Warning:

If the maximum operating values are exceeded the propeller, engine or gearbox may be damaged. If the propeller becomes damaged its balance will be affected which can cause failure of the engine mountings.

Before starting the engine, the pilot must ensure that the area around the propeller is free from debris to avoid any impacts on the blades by foreign objects.

The engine can only be hand started by qualified personnel.

4 Installation

To mount the propeller blades together, at first the blades are placed onto a table, where they are straightened and adjusted.
Please note: The Blades for the 4-Blade Propeller have to be mounted according to the label; the paired Blades have to be opposite!

2-blade propeller:

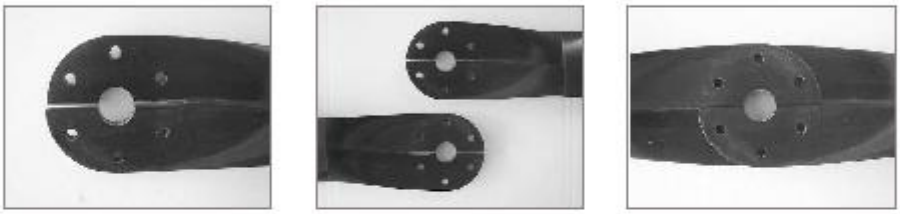

3-blade propeller:

4-blade propeller

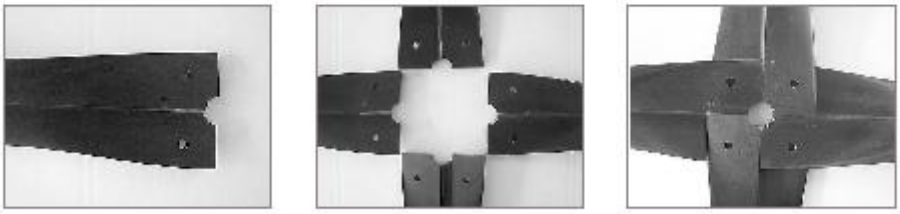

Figure 2 to 10: Mounting of the blades

Warning: **At this point it has to be checked that the tailing edge of all Blades is in right position in turning direction – backside aligned.**

Afterwards the propeller front plate (pressure disc) is aligned and the bolts are placed.

Figure 11: Front plate with screws

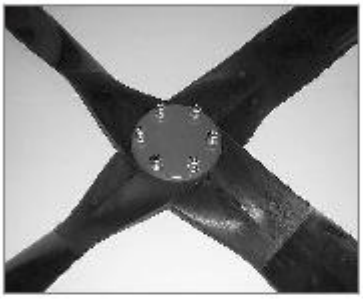

Figure 12: Propeller (e.g. H50F) with mounted front plate

At least the propeller is mounted onto the propeller flange of the engine.

Please check and follow the specifications of screw dimensions and breakaway torque of engine manual.

In general the following breakaway torques are obtained:

For screws of M6 torque of 12 Nm and M8 torque of 25 Nm.

The mounting of the propeller has to be checked (retightening of screws) after 3 working hours.

To retain the screws there are the following alternatives possible:

- the prefered solution is to use a wire as bolt retaining device
- for propeller flanges with through holes self locking nuts can be used
- if the first alternatives are not possible also loctite 372 can be used

5 Pre-Flight Checks

Before every flight the following has to be controlled:

- Check engine / Gearbox bearings for excessive play.
- All blades are fixed
- Check bolts for tightness and security of wire locking
- No play of propellertip
- Blades are not damaged and have no cracks

Slight resin-flakings by debris can be accepted, but should be repaired shortly. The repair can be done with economical application of special resin. If the check is not satisfactorily the handling has to be stopped and the propeller repaired.

Warning:

A propeller failure has more serious consequences than an engine failure! As consequence of a damaged propeller serious vibrations are possible. This unbalanced mass can tear the engine out of the engine bracket and lead to serious balance point shiftment with serious consequences to stay in a save flight attitude!!!

6 Maintenance

The propeller should be cleaned at the end of each day's operation.

This prevents the built up of dried grass and insects etc. on the blades. Cleaning of the blades should be carried out with a soft sponge using a weak detergent solution.

Annually, the propeller should be polished professionally. It is recommended that this is carried out by a respected coachbuilder or similar facility.

7 Warranty

HELIX Carbon GmbH warrants the propeller for two years from the date of purchase (according to German law). The guarantee covers material defects but does not cover subsequent losses.

The operator flying with this propeller does so at his/her own risk.

Any claim will only be considered if the propeller has been installed and used in accordance with this manual.

5. Powerplay Sting 250

POWERPLAY

Designed by: swing

STING 250

Service- Kontrollheft
Maintenance and Service Book
Controle et Feuille de Service

Fassung: 11.01.06

POWERPLAY

STING 250

Technical Datas
Technische Daten
Fiche technique

Homologation **Zulassung** homologation	DHV 1-2 DULV
Take off weight **Startgewicht** Poids pilote avec équipement	105-170 DHV 105-250 DULV
Cells **Zellen** Caissons	48
Wing area projected **Flügelfläche projiziert** Surface projetée	29,4 m²
Wing span **Spannweite** Envergure	13,3 m
Projected wing span **Spannweite projiziert** Envergure projetée	11,1 m
Aspect ratio **Streckung** Allongement	5,1
Projected aspect ratio **Streckung projiziert** Allongement projetée	4,2
Canopy weight **Schirmgewicht** Poids de l'aile	6,9 kg
Min. sink rate **Min. Sinkgeschwindigkeit** Taux de chute min	1,15 m/s
Max speed **Max. Geschwindigkeit** Vitesse avec accelerateur	-
Trim speed **Trimmgeschwindigkeit** Vitesse bras hauts	42 Km/h

Deutscher Hängegleiterverband e. V. im DAeC

DHV/OeAeC-Technikreferat

LBA-anerkannte Prüfstelle für Hängegleiter und Gleitsegel

Gütesiegel

DHV/OeAeC

MUSTERPRÜFBESCHEINIGUNG

Gleitsegel

Musterprüfnummer ***DHV GS-01-0998-02***

Bezeichnung des Gerätemusters

Powerplay Sting 250

Das nachstehend bezeichnete Luftsportgerät ist als Muster geprüft im Auftrag von:

Swing Flugsportgeräte GmbH, An der Leiten 4, D-82290 Landsberied
Sitz in Deutschland: Kooperation mit Flight Design / Nachprüfung u. Vertrieb GS
MPR 21.09.01

Diese Musterprüfbescheinigung ist erteilt auf Grund der die Musterprüfung betreffenden Bestimmungen des Luftverkehrsgesetzes, der Luftverkehrs-Zulassungs-Ordnung, der Verordnung zur Prüfung von Luftfahrtgerät und der Lufttüchtigkeitsforderungen in der heute geltenden Fassung sowie zu den Bedingungen der Vereinbarung über Musterprüfung und des Schreibens vom 24.04.2002.

Die Musterprüfung gilt gemäß zugehörigem Geräte-Kennblatt Nr.: *DHV GS-01-0998-02*

24.04.2002	Harry Buntz	DHV - Technik
Datum der Ausstellung	Unterschrift	Deutscher Hängegleiterverband e.V. Gaisacher Straße 7, 83703 Gmund

Deutscher Hängegleiterverband e.V. im DAeC
DHV/DeAeC-Technikreferat
LBA-anerkannte Prüfstelle für Hängegleiter und Gleitsegel
Beauftragter der österreichischen Luftfahrtbehörde

DHV

Luftsportgeräte-Kennblatt
Gleitsegel

Geräte-Kennblatt Nr.: *DHV GS 01-0998 02* Ausgabe: *0* Datum: *24.04.2002*

I. Musterprüfung

1. Gerätemuster *Powerplay Sting 250*
2. Hersteller: *Swing Flugsportgeräte GmbH*
3. Datum der Musterprüfbescheinigung: *24.04.2002*

II. Merkmale u. d. Betriebsgrenzen

1. Gerätegewicht (ohne Packsack kg): *6,9*
2. Zulässiges Startgewicht minimal (kg): *105* maximal (kg): *170*
3. Anzahl der Sitze: 1, 2
4. Klasse: *1-2 Biplace, GH*
5. Startzeugbeschränkung: *Startzeuge der Gruppe GH*
6. Fußbeschleuniger: *Ja*
7. Trimmer (von Hand zu bedienen): *Nein*
8. Projizierte Fläche (m²): *29,7*
9. Windenschlepp: *Ja*
10. Tragegurtlängen (mm)

Tragegurt A:	Tragegurt B:	Tragegurt C	Tragegurt D:
normal: *540*	normal: *540*	normal: *540*	normal: *540*
beschleunigt: *400*	beschleunigt: *455*	beschleunigt: *495*	beschleunigt: *540*

Leinenverbindungsplan - line connection plan - plan de connection des suspentes

STING 250

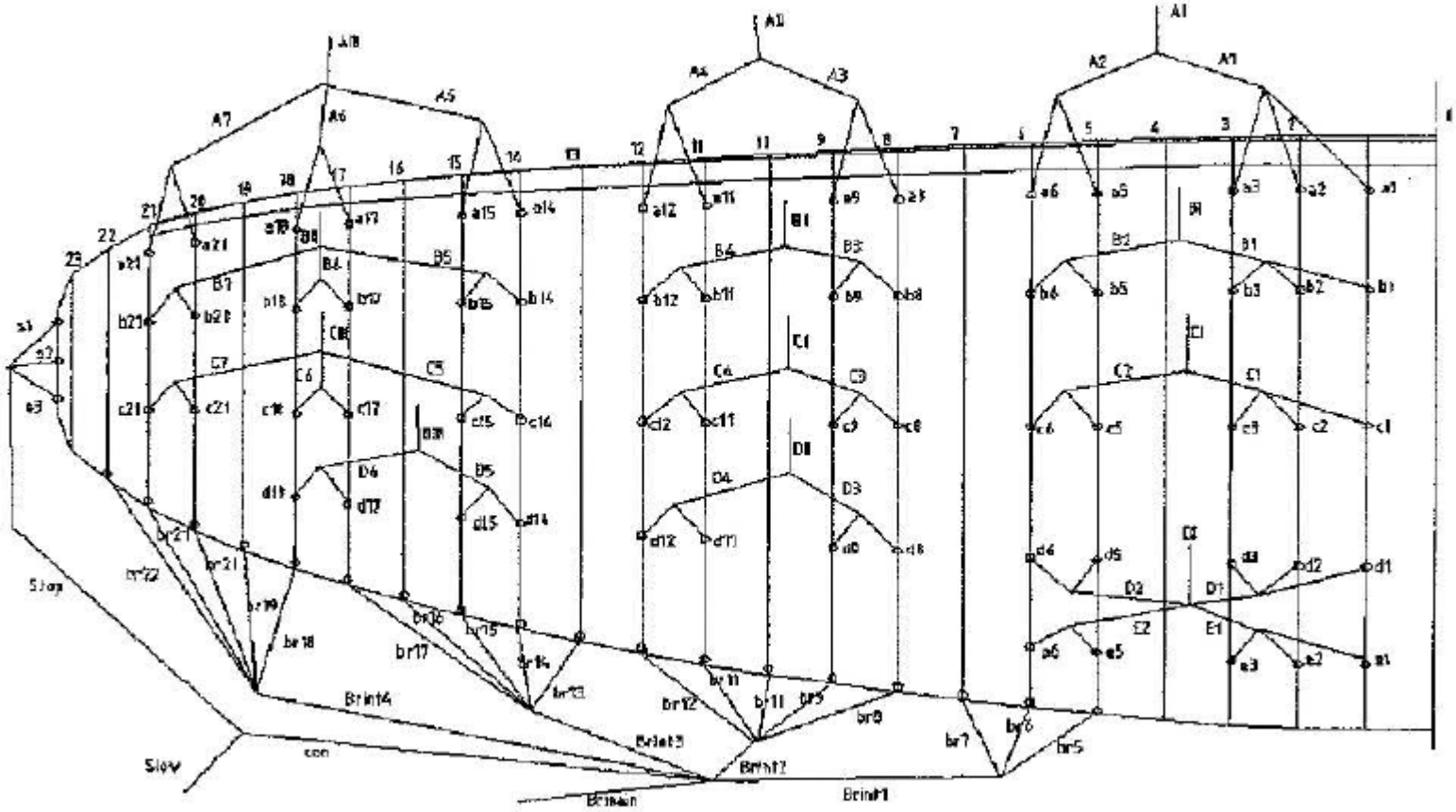

TECHNISCHE DATEN - TECHNICAL DATAS	STING 250

SEGELTUCH - SAIL CLOTH - TISSUS		
Obersegel - upper sail extrados	Nylon	Silicon - 46g
Untersegel - lower sail intrados	Nylon	Polyurethan - 44g
Rippen - ribs - nervures	Nylon	Polyurethan - 44g

LEINENMATERIAL - LINE MATERIAL - SUSPENTES				update 02.02.2005
Obere Galerie - Upper Gallery suspentage haut	Dyneema	NTSL 120	1,2mm	120 daN
Mittlere Galerie - Interm. lines suspentage intermédiaire	Tecnora Tecnora	TSL-220 TSL-380	1,8mm 2,2mm	220 daN 380daN
Stammleinen - main lines suspentage bas	Tecnora Tecnora	TSL-220 TSL-380	1,8mm 2,2mm	220 daN 380 daN

LEINENLÄNGENTOLERANZEN - LINE LENGTH TOLERANCE TOLÉRANCE DES LONGEURS DE SUSPENTES					
Leinen - lines suspentes	A	B	C	D	E
länger - longer tolérance en plus	+ 0 mm	+ 5 mm	+10 mm	+ 15 mm	+15 mm
kürzer - shorter tolérance en moins	- 10 mm	- 5 mm	- 0 mm	- 0 mm	- 0 mm

LEINENFESTIGKEITEN / LINE STRENGTH RÉSISTANCE DES SUSPENTES					
Leinen / lines / susp.	A	B	C	D	E
Top Lines 10g / 8g - DHV	Bruchlast / Brake Load / résistance à la traction 52 Kg	52 Kg	52 Kg	52 Kg	52 Kg
absolut Min. Bruchlast / absol. Min. Brake Load / absol. Min. résistance à la traction 8g / 6g - DHV	42 Kg	42 Kg	42 Kg	42 Kg	42 Kg
Intermediate Lines 10g / 8g - DHV	Bruchlast / Brake Load / résistance à la traction 104 Kg	104 Kg	83 Kg	83 Kg	83 Kg
absolut Min. Bruchlast / absol. Min. Brake Load / absol. Min. résistance à la traction 8g / 6g - DHV	83 Kg	83 Kg	63 Kg	63 Kg	63 Kg
Main Lines 10g / 8g - DHV	Bruchlast / Brake Load / résistance à la traction 208 Kg	208 Kg	167 Kg	167 Kg	167 Kg
absolut Min. Bruchlast / absol. Min. Brake Load / absol. Min. résistance à la traction 8g / 6g - DHV	167 Kg	167 Kg	125 Kg	125 Kg	125 Kg

DHV (mm)	STING 250

Nr	A	B	C	D	E	Br.	Nr
1	7905	7830	7895	8005	8105	8800	1
2	7810	7735	7800	7910	8010	8690	2
3	7815	7740	7805	7915	8015	8540	3
4	7790	7720	7785	7895	7990	8340	4
5	7830	7755	7820	7930	8030	8280	5
6	7760	7700	7760	7880		8260	6
7	7715	7660	7720	7835		8230	7
8	7680	7630	7690	7800		8190	8
9	7695	7650	7710	7815		8100	9
10	7650	7640	7710	7790		8030	10
11	7585	7595	7655	7725		7980	11
12	7510	7520	7575	7665		7940	12
13	7460	7475	7525	7615		7900	13
14	7380	7400	7445			7840	14
15	7335	7365	7400			7740	15
16						7720	16
17						7660	17
18						7580	18
19							19
20							20
21							21
S1		6885					S1
S2		6855					S2
S3		6885					S3
S4							S4

Zum Beispiel: For example: Par example:

A1	A Leine Mitte - inner A Line - A la plus intériur
D13	D Leine aussen - outer D line - D exterieur
S1	Stabiloleinen - stabilo lines stabilo

Porositätstabelle - porosity table - table de porosité

Messgerät - Instrument - Instrument Zeitmesssungen - measured time - temps de mesure						
Kretschmer			JDC			
LD 100 (1s)	LD 100 (1/10s)	LD 150 (1/10s)	1s	deutsch	english	francaise
> 250	> 2.500	> 10.000	> 100	neu	new	neuf
200 - 250	2000 - 2.500	7.500 - 10.000	75 - 100	neuwertig	like new	comme neuf
150 - 200	1500 - 2.000	5.000 - 7.500	50 - 75	gebraucht, sehr guter Zustand	used - in very good condition	utilisé - en très bon état
100 - 150	1.000 - 1.500	2.000 - 5.000	25 - 50	gebraucht, guter Zustand	used - in good condition	utilisé - en bon état
50 - 100	500 - 1000	500 - 2.000	8 - 25	deutlich gebraucht, guter Zustand	hard used - good condition	très utilisé - en bon état
10 - 50	100 - 500	150 - 500	2 - 8	stark gebraucht, Materaialkontrolle in kurzen Abständen erforderlich	hard used - Material check in short intervals necessary	très utilisé - matériel à contrôler fréquemment
0 - 10	**0 - 100**	**0 - 150**	0 - 2	**überbeansprucht NICHT mehr flugtauglich**	**NOT flyable - NOT airworthy**	**plus en état de vol - NON homologué**

STING 250	TESTPROGRAMM - TEST PROGRAM PROGRAMME DE TEST (DHV)		
Test pilot weight **Testpilotengewicht** poids du pilote-test	105 kg	170 kg	140 kg
Accelerated **Beschleunigt** accélérateur	Nein No non	Nein No non	Ja Yes oui
Harness **Gurtzeug** sellette	Sup'Air Altiplume	Liga Integral	Liga Integral
Take off **Start** décollage	1	1	- X -
Straight flight / speed **Geradeausflug / Geschwindigkeiten** vol droit / vitesse	1	42 km/h 1	36 km/h 1 47 km/h
Turn handling **Kurvenhandling** maniabilité	1 - 2	1 - 2	- X -
Symmetric stall **Beidseitiges überziehen** décrochage symétrique	1	1	- X -
Front collapse **Frontales einklappen** fermeture frontale	1 - 2	1 - 2	1 - 2
Asymetric collapse **Einseitiges Einklappen** fermeture asymétrique	1	1 - 2	1 - 2
Countersteering an asymetric collapse **Einseitiges Einklappen und Gegensteuern** contre à l'asymétrique	1	1	- X -
Full stall symetric exit **Fullstall, symmetrische Ausleitung** décrochage avec sortie symétrique	1	1 - 2	- X -
Full stall asymetric exit **Fullstall asymetrische Ausleitung** décrochage avec sortie asymétrique	1	1 - 2	- X -
Spin out of straight flight **Trudeln aus Trimmgeschwindigkeit** vrille à vitesse "bras haut"	1 - 2	1 - 2	- X -
Spin out of turns **Trudeln aus stationären Kurvenflug** vrille stationnaire	1	1 - 2	- X -
Spiral dive **Steilspirale** virage engagé	1	1	- X -
B Stall **B Stall** "B" décrochage	1	1	- X -
Landing **Landung** atterrissage	1	1 - 2	- X -

More information you can find under:
Mehr Informationen unter: www.powerplay-gliders.de und www.dhv.de
pour plus d'information consulter le site :

Beauftragter des
Bundesministeriums für Verkehr

Gerätekennblatt für Motorgleitsegel

I. Allgemein

1. Gerätemuster:	Powerplay Sling 250
2. Hersteller:	Swing Flugsportgeräte GmbH
Anschrift:	An der Leiten 4 82290 Landsberied
Telefon:	
3. Anzeigebestätigung:	D-10.2802
4. Gütesiegel Nr.:	M 010
5. Bemerkungen:	

II. Merkmale und Betriebsgrenzen

1. Gerätegewicht (ohne Fallschirm):	6,9 kg
2. Zulässiges Startgewicht minimal:	105 kg
3. Zulässiges Startgewicht maximal:	248 kg
4. Anzahl der Sitze:	1, 2
5. Einstufung:	
6. Gurtzeugeschränkung:	SH
7. Fußbeschleuniger:	—
8. Trimmer:	ja

Seite 1 zum Kennblatt Powerplay Sling 250, Gütesiegel Nr. M 010

POWERPLAY

Designed by: swing

An der Leiten 4
D - 82290 Landsberied
Germany
Tel.: +49 (0) 8141 3277888
Fax.: +49 (0) 8141 3277870

www.powerplay-gliders.de

6. Independence

independence
gliders for real pilots
www.independence-world.com

Owner´s Manual

Rescue system
Annular Tandem, Annular Tandem HG
Annular 36 Tandem; Annular 36 Tandem HG

Fly market GmbH & Co. KG
Am Schönebach 3
D-87637 Eisenberg

Tel.: +49-8364-9833-0
Fax: +49-8364-9833-33
Mail: info@independence-world.com

Table of contents

Warning

This emergency system should not be used for skydiving.

Emergency systems are not required to be registered by the Department of Aviation in Germany (Luftfahrt Bundesamt LBA). Any injuries or damage occurring in connection with this emergency system cannot be held the responsibility of the manufacturer.

Paragliding is an extremely dangerous activity that can and often does result in serious injury or death. The designer, manufacturer, distributor, wholesaler and retailer cannot and will not guarantee your safety when using this rescue system. You alone must judge the flying conditions, including weather, wind, congestion, launching areas, and landing area before you fly. Rescue systems require careful and consistent care. Overtime, solar radiation, dirt, dust, grease, water, wind, stress, and other variables will degrade the performance and safety of the system, thereby increasing the risk of injury or death. Read the owner's manual of the rescue system before you fly. Always wear a helmet and protective clothing when flying a paraglider.

1. TECHNICAL DETAILS

Parachute types: Paragliding rescue system: Annular Tandem; Annular Tandem 36
Hang gliding rescue system: Annular Tandem HG; Annular Tandem 36 HG

Manufacturer:

Fly market GmbH & Co. KG
Am Schönebach 3
D-87637 Eisenberg
Tel. +49-8364-9833-0

	Annular Tandem **Annular Tandem HG**	**Annular 36 Tandem** **Annular 36 Tandem HG**
Weight (kg):	3,9	4,2
Area (m²):	65	65
Max. Load (kg):	200	250

2. Purpose

The emergency parachutes are manually-released parachutes for paragliding / hang gliding (HG version) pilots in an emergency situation while flying.

3.Conditions of use

Operational lifespan of parachute: 10 years with an inspection every 2 years. For the next three years thereafter, the parachute must be inspected annually.

4. Necessary documentation

A) Handbook
b) Inspection records

5. Mode of operation

During an emergency in the air, the reserve is deployed by giving the release handle a firm tug. This action will remove the fastening pins from their securing loops. The pilot should then throw the inner container to the rear, either to the left or to the right. The air current stretches the lines and subsequently opens the inner container. The canopy releases, stretches and fills with air.

6.Inspecting the parachute

A parachute must be inspected by a registered packer before it is packed. After being opened during an emergency rescue, the parachute must be inspected. A packed parachute which is to be repacked. should undergo a release test. This establishes whether the power of the release is between 2 kp and 7 kp.
It is recommended that the Annular be opened, aired and repacked after being closed for a period of four months.

7. Storage

Oil, grease, acid and paint should not be stored near the parachute. The storage space should be dry. Parachutes which have not been used for a long period of time should be opened and the canopy loosely rolled and stored in a bag.

8. Cleaning and drying

A dirty canopy and container can be washed with clean tapwater. If the rescue system comes in contact with salt water, it should be washed with fresh water and hung up to drip dry in the shade. Grease and mould can affect the strength of parachute components and when evident, the parachute should be sent to the manufacturer for cleaning and inspection.

9. In the event of damage

It is established during an inspection that the airworthiness of the canopy is impaired, then it must be sent to the manufacturer for repair. This is also advisable if the parachute is damaged and the pilot is unsure whether the airworthiness is affected. All repairs should be carried out by the manufacturer.

10. The parachute, lines and bridles

The parachute canopy has 30 segments (Annular Tandem, Tandem HG; Annular 36 Tandem, Tandem HG: 36). The material is an air-permeable, tear resistant nylon fabric. The main seams are reinforced with a band. The lines are connected at the base with V-flaps, spliced and overstitched on the join. The apex is pulled in and secured with an elastic line. This allows a fast opening, a low sink-rate and no oscillations. When sewn the main bridle has a strength of 2.6t.

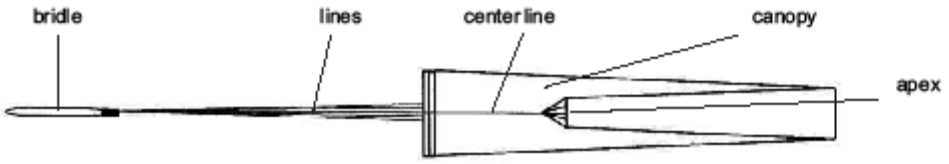

12. INNER / OUTER CONTAINER

The inner container is made from tear-restistant nylon fabric. If the rescue system is delivered with outer container it includes a release handle and two pins. The outer container is made from strong, water-resistant nylon. It consists of a base section, two side flaps and an upper and lower flap.

13. PACKING THE PARACHUTE

Packing the parachute should take place on a special packing table or a clean flat surface. The parachute is stretched to ist full length on the surface. The packer stands to the right of the parachute.

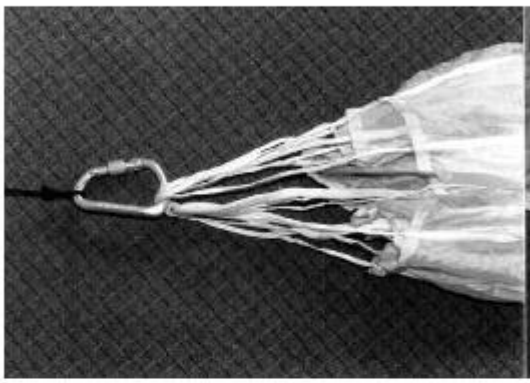

1. Secure the parachute at its apex to a suitable hook.

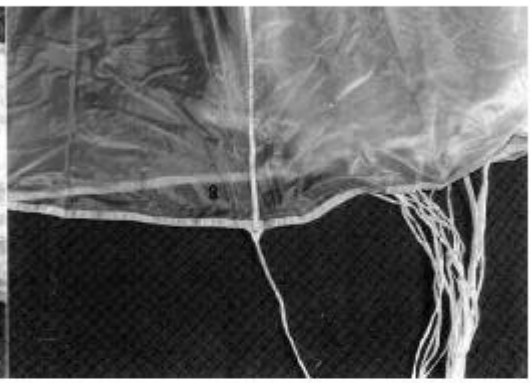

2. The packer takes segment 15 (Annular Tandem/HG), pulls it toward him, and places the segments, one by one, on top of each other, so that the lines are between the thumb and index finger of the right hand. (Annular 36 & 36 HG: Segment 18). Finally take the center line also between tumb and index finger.

3. The canopy is placed on the table and folded such that the stamped segment (No. 1) lies on the top. The same number of segments are now on the left and right side.

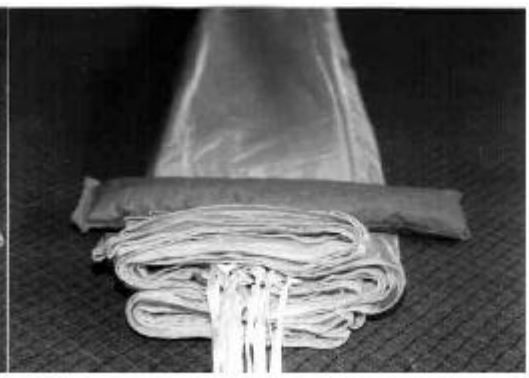

4. Fold the canopy in the form of an "S", so that the lines are together in the centre. To keep the lines lying flat they must be held down with a weight.

5. Arrange the upper part of the canopy as shown.

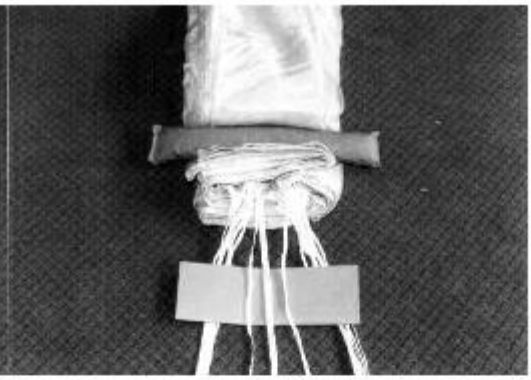

6. Inspect the lines 1 and 30 (for Annular Tandem & HG); lines 1 and 36 (Annular 36 & 36 HG) Check that none of the lines are twisted.

7. Place the parachute in the container in the form of an "S". At first make 3 "S" folds on the inner container. Leave the last 40 cm without an "S".

8. Take all "S" folds and put it inside of the inner container. Fold the last 40 cm in small "S" folds in the inner container.

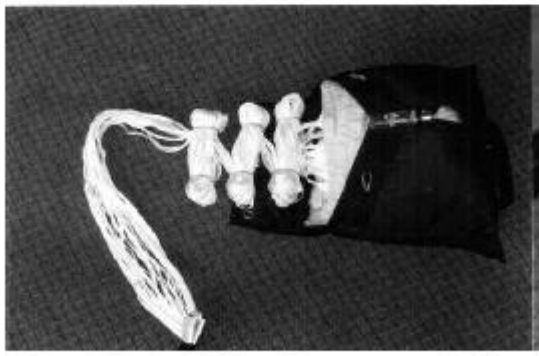

9. Form the lines in 3 "S" forms. The curve on each "S" is loosely secured with rubber bands. The 3 bundles of lines are placed on the parachute.

10. Close the inner container with the last 50 cm of lines. Start with the middle, finish with the outer.

11. The bridle is placed in an "S" shape on the base of the outer container. Arrange the bridle so that it comes from the outer container on the left or right side, depending on the needs of the pilot.

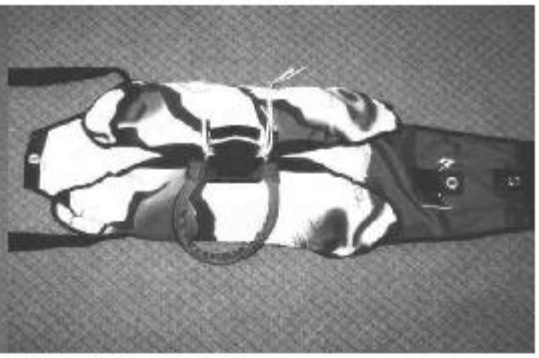

12. At first close the side flaps.

13. Finish by closing the lower fastening flap and finally the covering flap.

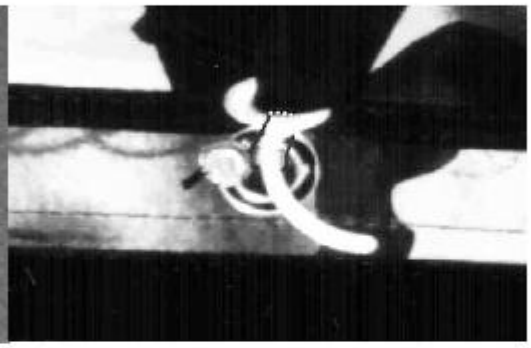

14. To avoid an unintentional opening the DHV prescribe to use a special thread to secure the pins. This defines a minium opening force of at least 2 daN. This special thread must be put through the hole of the pin and around the loop as shown in the picture above.
To secure the pin it is only allowed to use certified material because if the strength of this material is too high the save operation of the rescue system is not guaranteed.
This thread is supplied by Fly market GmbH & Co. KG! <u>Do not use other threads which may look the same!</u>

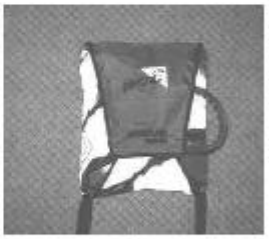

15. Enter the packing details in the record book, including the name of the packer.

16. Installation in harnesses with integrated rescue system container (Compatibility Check):

With the installation of the rescue system in a harness the compatibility of harness and rescue system is to be checked. This check has to be carried out only by authorized persons.
This check is to be noted in the record book of the rescue system.
In this check must be paid attention to the fact that length is minimized between the release handle and the inner container. Therefore different loops are attached on the inner container for the best result. The shortest possible setting should be chosen always to allow a good throwing of the system.
Make sure that a reliable opening of the harness container is guaranteed and the pin is not blocked!!!

Attachment points handle: